USB PD Multi Fast Charging Protocol Power Receiving Chip CH224

Datasheet

Version: V2.0

https://wch-ic.com

1. Overview

CH224Q/CH224A is a USB PD fast charging protocol receiver chip that supports USB PD3.2, up to PD3.2 EPR 140W power, and supports single resistor configuration, I/O level configuration and I2C configuration. Through the I2C interface can read the protocol handshake status and read the current PD gear rated current. Chip built-in high-voltage LDO, static low-power consumption, high integration, peripheral streamlined. Chip integrated output voltage detection and over-voltage protection, can be widely used in various types of electronic equipment to expand the high-power input such as wireless chargers, small appliances, lithium battery power tools and other occasions. CH224K/CH224D/CH221K are USB PD3.0 fast charging protocol receiver chips, supporting up to 100W power, single resistor configuration and I/O level configuration.

2. Features

- Support 4V to 30V input voltage
- Support PD3.2 EPR, AVS, PPS, SPR protocols and BC1.2 and other boost fast charging protocols
- Support eMarker simulation and automatic detection of VCONN.
- Support multiple ways to dynamically adjust the requested voltage
- Support 400kHz rate I2C communication.
- Built-in high-voltage LDO, static low-power consumption.
- Single chip with high integration, streamlined peripherals and low cost.
- Built-in overvoltage protection module OVP

3. Pinouts

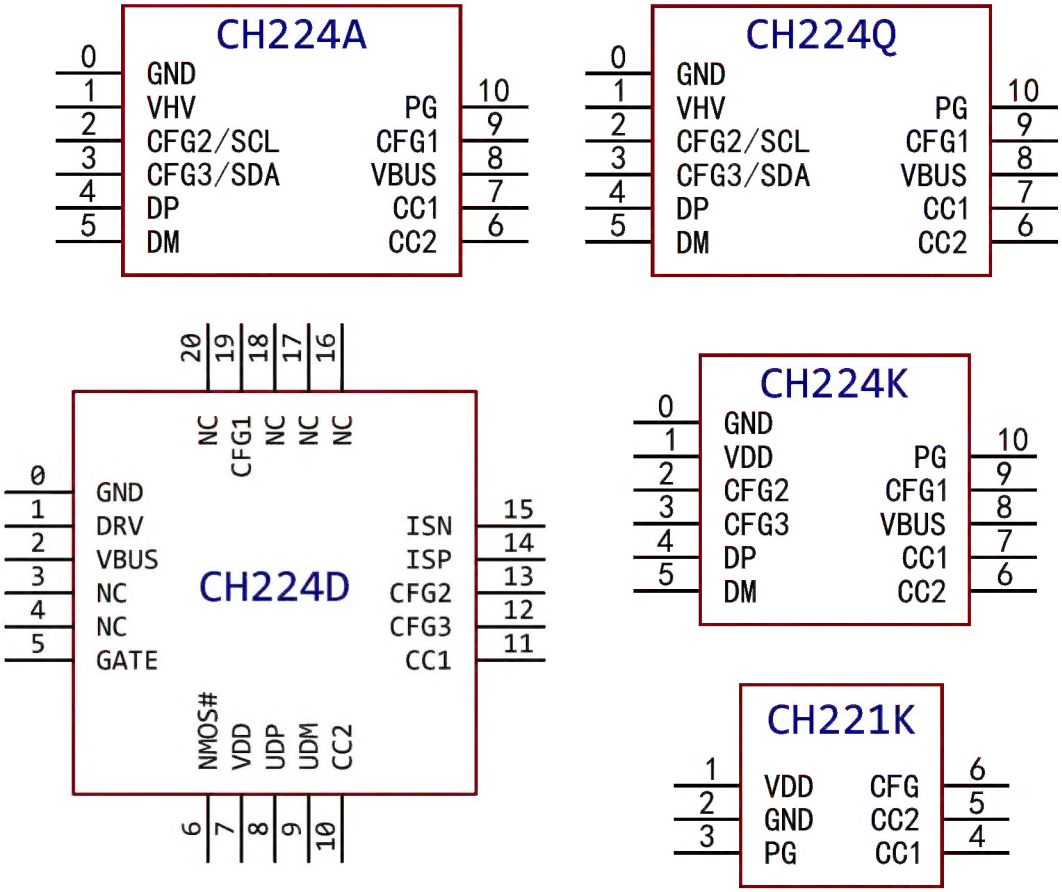

Table 3-1 Package description

Package Form	Body Size	Pin Pitch		Package description	Order Model
DFN10	2*2mm	0.4mm	15.7mil	Dual Flat No-Lead Package	CH224Q
ESSOP10	3.9mm	1.00mm	39.4mil	EPAD Shrink Small Outline Package	CH224A
ESSOP10	3.9mm	1.00mm	39.4mil	EPAD Shrink Small Outline Package	CH224K
QFN20	3*3mm	0.40mm	15.7mil	Quad Flat No-Lead Package	CH224D
SOT23-6	1.6mm	0.95mm	37mil	Small Outline Transistor	CH221K

Note: 1. Pin 0# refers to the ESSOP10, DFN10, QFN20 package EPAD.

2. Small and versatile CH224Q is recommended for new projects, CH224A focuses on PCB compatibility with CH224K.

4. Pin Definitions

Table 4-1 CH224Q, CH224A pin definition

Pin No.		Pin name	Pin type(1)	Function description
CH224Q	CH224A			
0	0	GND	P	Common ground terminal, heat dissipation EPAD.
1	1	VHV	P	Operating power supply input, externally connected with 1uF capacitance to ground (pay attention to tolerant voltage).
4	4	DP	I/O	USB bus.
5	5	DM		
7	7	CC1	I/O	Type-C CC signal line.
6	6	CC2		
9	9	CFG1	I	Power gear configuration input pin 1.
2	2	CFG2/SCL	I,PU	Power gear configuration input pin 2 or I2C clock input pin.
3	3	CFG3/SDA	I/O,PU	Power gear configuration input pin 3 or I2C data bidirectional pin.
8	8	VBUS	I	Voltage detection input needs to be shorted to VHV.
10	10	PG	OD	Defaulted PowerGood indication, active low, can be customized.

Table 4-2 CH224K pin definition

Pin No.	Pin name	Pin type(1)	Function description
CH224K			
0	GND	P	Common ground terminal, heat dissipation EPAD.
1	VDD	P	Operating power input, external 1uF capacitor to ground, series resistor to VBUS.
4	DP	I/O	USB bus.
5	DM		
7	CC1	I/O	Type-C CC signal line.
6	CC2		
9	CFG1	I	Power range configuration input pin.
2	CFG2	I	
3	CFG3	I	
8	VBUS	I	Voltage sense input, requires series resistor to external input VBUS.
10	PG	OD	Defaulted PowerGood indication, active low, can be customized.

Table 4-3 CH224D pin definition

Pin No.	Pin name	Pin type(1)	Function description
CH224D			

0	GND	P	Common ground terminal, heat dissipation EPAD.
2	VBUS	P	For operating power input, it is recommended to connect an external 0.1uF or 1uF capacitor to ground.
7	VDD	P	Internal regulator output terminal, external 1uF capacitor to ground.
8	DP	I/O	USB bus.
9	DM		
11	CC1	I/O	Type-C CC signal line.
10	CC2		
19	CFG1	I	Power gear configuration input pin.
13	CFG2	I	
12	CFG3	I	
1	DRV	O	Weak drive output, used to drive the configuration resistor.
14	ISP	I	Differential input, used to detect operating current and customized functions.
15	ISN		
5	GATE	O,HV	Used to drive high-side power path NMOS, customized functions.
6	NMOS#	I	Drive NMOS enable, low level is valid, and should be short-circuited to GND.

Table 4-4 CH221K pin definition

Pin No. CH221K	Pin name	Pin type(1)	Function description
1	VDD	P	Working power input, external 1uF capacitor to ground, series resistor to VBUS.
2	GND	P	Common ground terminal.
4	CC1	I/O	Type-C CC signal line.
5	CC2		
3	PG	I,OD	Defaulted PowerGood indication, active low, can be customized.
6	CFG	OD	Power gear configuration input pin.

Note 1: Pin type abbreviation explanation:

I = Signal input;

O=Signal output;

P = Power supply or ground;

OD = Open-drain output;

HV = High voltage pin;

PD = Built-in pull-down resistor;

PU = Built-in pull-up resistor.

5. Function Description

5.1 Overview

CH224Q/CH224A is a protocol power supply receiving end chip that supports PD3.2EPR, AVS, PPS, SPR protocol handshake, BC1.2 and other boost fast charging protocol inputs. It supports voltage requests in the range of 5 to 30V and can dynamically configure the requested voltage level through single resistor configuration, I/O level configuration and I2C configuration. Among them, CH224Q is smaller in size and is suitable for scenarios with higher integration requirements.

CH224A is pin-compatible with CH224K. In most cases, it can be replaced by replacing peripheral components without changing the PCB. For details, please refer to Chapter 7.

5.2 CH224Q/CH224A Voltage Gear Configuration

5.2.1 Single Resistor Configuration

Applicable to applications where different requested voltages can be achieved on the same PCB by modifying the resistance value.

CFG1 connects resistors to GND, and different resistance values correspond to different voltage request gears. When using single resistor configuration mode, CFG2 and CFG3 pins can be suspended. The comparison table of resistance and requested voltage is as follows:

Table 5-1 Comparison between resistance and requested voltage

Configuration resistor value	Request voltage
6.8KΩ	9V
24KΩ	12V
56KΩ	15V
120KΩ	20V
210KΩ	28V

5.2.2 I/O Level Configuration

Applicable to applications where the MCU dynamically adjusts the requested voltage or the PCB circuit fixes the requested voltage.

Table 5-2 I/O level and request voltage comparison

CFG1	CFG2	CFG3	Request voltage
0	0	0	9V
0	0	1	12V
0	1	1	20V
0	1	0	28V
1	X	X	5V

"X" in the table means don't care.

"0" in the table indicates low level, and the external terminal should be short-connected to GND.

"1" in the table indicates a high level. CFG2 and CFG3 have built-in pull-up resistors and support 3.3V or 5V level input. External push-pull or open-drain output drive can be used. If CFG1 needs to be set to a high level, there are

three methods according to different application scenarios:

(1) Pull up to the VHV pin through a 100KΩ resistor (when no control of CH224 is required);

(2) Connect a 2KΩ resistor in series to the GPIO of the MCU, and use the push-pull mode to output a high level (when using a 5V level to control CH224);

(3) Directly connect to the GPIO of the MCU and use the push-pull mode to output a high level (when using 3.3V level to control CH224).

5.2.3 I2C Configuration

When the chip is configured as a single resistor, the I2C configuration function is automatically enabled. At this time, the voltage request can be controlled or related information can be read through I2C communication. CH224Q/CH224A 7-bit I2C address is 0x22 or 0x23 (excluding read and write bits). CH224A only supports single-byte read and write operations, and CH224Q supports I2C continuous read and write operations.

Table 5-3 Chip function register

Address		Name	Function
0x09		I2C status register	Get the current protocol status
0x0A		Voltage control register	Switching request voltage
0x50		Current data register	Get the maximum available current in the current gear
Only CH224Q	0x51	AVS voltage configuration register (high eight bits)	Configure the AVS request voltage high eight bits
	0x52	AVS voltage configuration register (low eight bits)	Configure the AVS request voltage low eight bits
	0x53	PPS voltage configuration register	Configure PPS request voltage
	0x60~0x8F	PD power data register	Get complete power information of the adapter

0x09: I2C status register

Bit	7	6	5	4	3	2	1	0
Name	Reserved	AVS exist	EPR exist	EPR activation	PD activation	QC3 activation	QC2 activation	BC activation
Defaulted value	0	0	0	0	0	0	0	0
Read/Write	Read-only							

When BIT0, 1, 2, 3, 4 is 1, it indicates that the corresponding protocol handshake is successful.

When BIT5 is 1, it indicates that the power supply exists in EPR mode (i.e., adapter maximum power > 100W mode).

When BIT6 is 1, it indicates that the power supply exists in AVS mode.

0x0A: Voltage control register

Bit	7	6	5	4	3	2	1	0
Name	Request voltage value, refer to the detailed explanation							
Defaulted value	0x00							

Read/Write	Write-only

Request voltage details:

0: 5V 1: 9V 2: 12V 3: 15V 4: 20V 5: 28V

6: PPSmode(Only CH224Q) 7: AVS mode (Only CH224Q)

0x50: Current data register

Bit	7	6	5	4	3	2	1	0
Name	Maximum current reference value (unit: 50mA)							
Defaulted value	0xXX							
Read/Write	Read-only							

Indicates the maximum current value available under the current PD gear. This register is only valid during the handshake PD protocol.

0x51, 0x52: AVS voltage configuration register high eight bits, AVS voltage configuration register low eight bits (only CH224Q)

Bit	15	14	13	12	11	10	9	8	7	6	5	4	3	2	1	0
Name	AVS request voltage value (unit: 25mV）															
Defaulted value	0x0000															
Read/Write	Write-only															

When configuring, write the upper eight bits first and then the lower eight bits. When applying for AVS for the first time, configure the voltage first, and then configure the voltage control register to AVS mode. Subsequent voltage adjustments can be made by directly modifying the AVS voltage configuration register.

0x53: PPS voltage configuration register

Bit	7	6	5	4	3	2	1	0
Name	PPS setting voltage (unit: 100mV）							
Defaulted value	0x00							
Read/Write	Write-only							

When applying for PPS for the first time, configure the voltage first, then configure the voltage control register to PPS mode. For subsequent voltage adjustments, simply modify the PPS voltage configuration register.

0x60~0x8F: PD power data register (Only CH224Q)

Defaulted value	0x00
Read/Write	Read-only

When the adapter's power supply capacity is less than 100W, reading this area can obtain complete power SRCCAP data.

When the chip is in EPR mode (28V), reading this area can obtain the complete EPR_SRCCAP data.

5.3 Simulation eMarker Function

If you want to use the simulation eMarker function and request an output greater than 20V or greater than 60W, you must use a Type-C male connector and connect a 1KΩ resistor from the CC2 pin to GND (please contact our technical support).

6. Reference Schematic

6.1 CH224Q/CH224A Reference Schematic

6.1.1 Reference Schematics for Single Resistor Configuration and I2C Configuration (See Table 5-1 for Rset resistance value corresponding to requested voltage)

The single resistor configuration is achieved by connecting the CFG1 pin to GND with a configuration resistor of a specific resistance value. At this time, CFG2 and CFG3 can be used for I2C configuration. If I2C configuration is not used, CFG2 and CFG3 can be left floating.

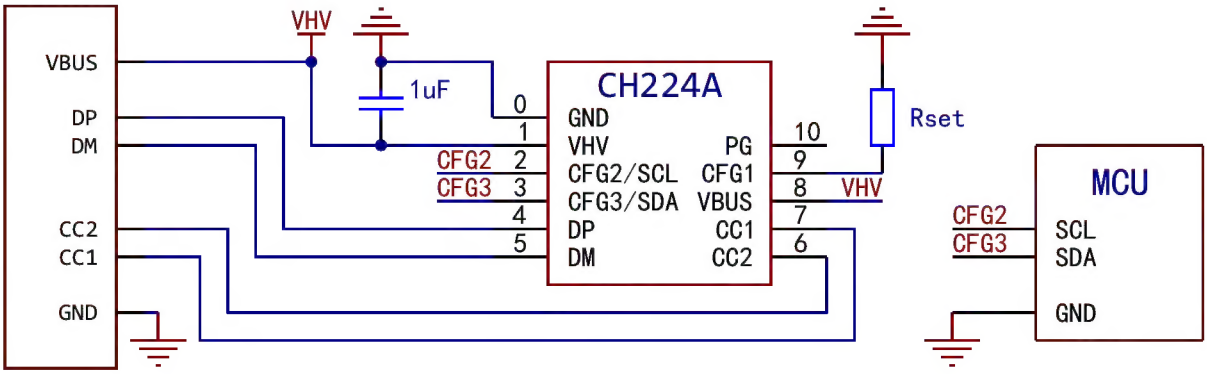

6.1.2 I/O Level Configuration Reference Schematic Diagram (I/O level corresponding to the requested voltage reference table 5-2)

When the power system does not need to interact or control CH224, CFG1 can provide a high level by connecting 100KΩ in series to the VHV pin (the figure below shows the I/O level configuration of 20V).

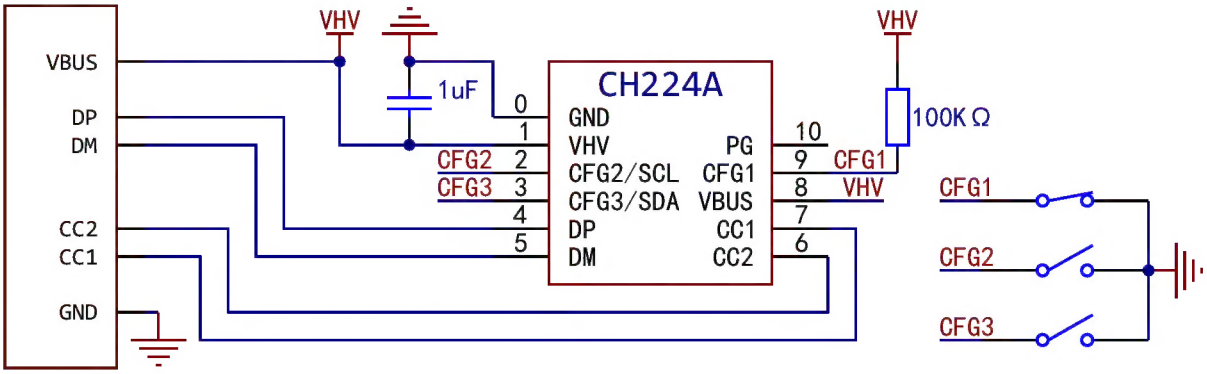

When the power system has a 3.3 or 5V power supply and needs to control CH224, CFG1 can be connected to the GPIO of the MCU in the system (as shown below). If the system high level is 3.3V, R1 should be 0Ω; if the system high level is 5V, R1 should be 2KΩ.

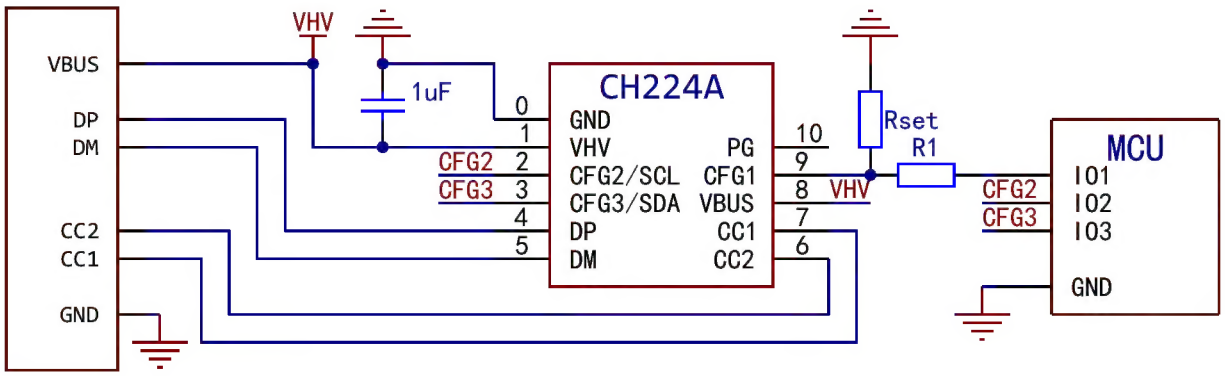

6.2 CH224K Reference Schematic (I/O level is configured for 20V)

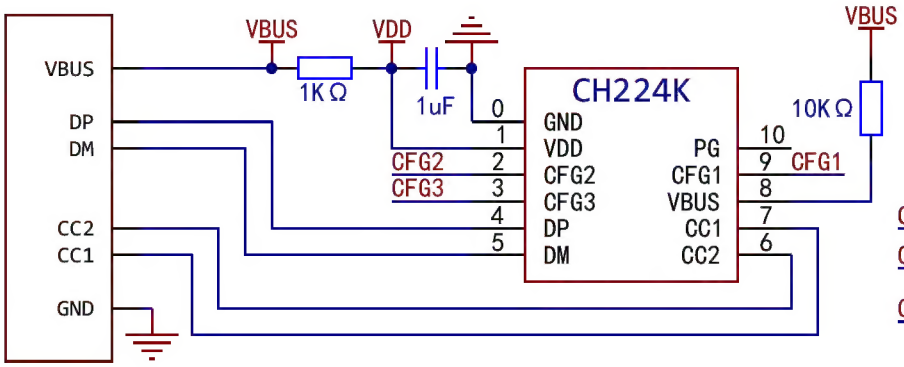

CFG1	CFG2	CFG3	Request voltage
1	X	X	5V
0	0	0	9V
0	0	1	12V
0	1	1	15V
0	1	0	20V

Note: It is recommended to upgrade to CH224A chip, refer to Section 7.2.

6.3 CH224D Reference Schematic (Single resistor configuration 9V)

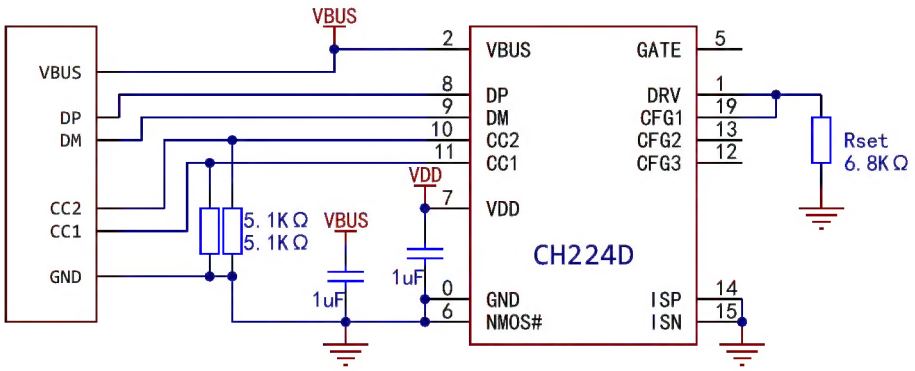

Rset resistor	Request voltage
6.8KΩ	9V
24KΩ	12V
56KΩ	15V
NC	20V

6.4 CH221K Reference Schematic (Single resistor configuration 20V)

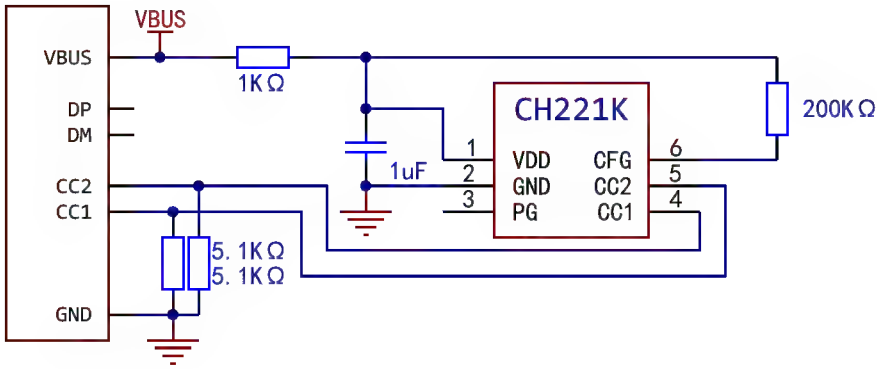

Rset resistor	Request voltage
10KΩ	5V
20KΩ	9V
47KΩ	12V
100KΩ	15V
200KΩ	20V

7. Guide for CH224A to Replace CH224K

CH224A is pin-compatible with CH224K. In most cases, it can be replaced by replacing peripheral components without changing the PCB. The following are the differences between the chips and common replacement examples.

7.1 Differences between CH224A and CH224K

- CH224A's pin 1 is VHV with 32V tolerant voltage, CH224K's pin 1 is VDD with 3.6V tolerant voltage
- CFG2 and CFG3 of CH224A have their own internal pull-up resistors, CFG2 and CFG3 of CH224K have no internal pull-up resistors.
- CFG1 of CH224A has 3.8V tolerant voltage, and CFG1 of CH224K has 8V tolerant voltage.
- VBUS of CH224A has 3.8V tolerant voltage, and VBUS of CH224K has 8V tolerant voltage

7.2 Common Substitution Examples

7.2.1 Original CH224K is in Single Resistor Configuration Mode (Rset resistor is reserved, and CFG2 and CFG3 are left floating or shorted to GND)

Figure 7-1 Schematic diagram of original CH224K single resistor configuration

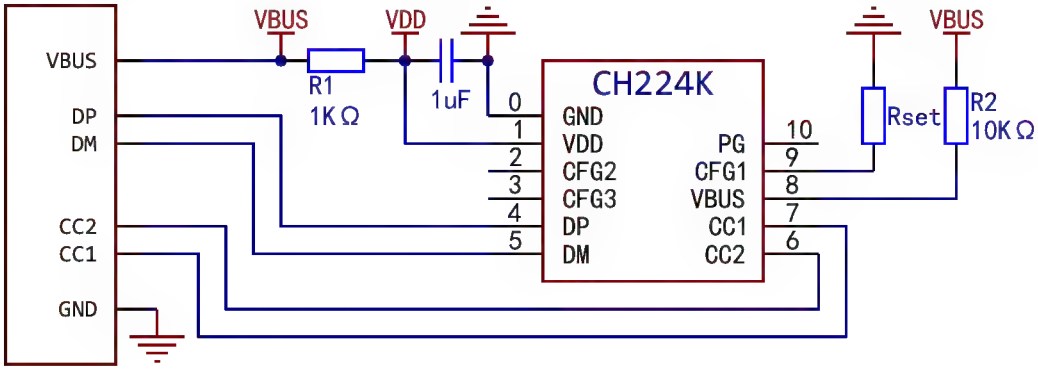

The following changes are required:

1. Short or replace R1 with 0Ω;
2. Short or replace R2 with 0Ω;
3. Change Rset to the configuration resistor of CH224A.

7.2.2 Original CH224K is in I/O Level Configuration Mode (CFG1, CFG2 and CFG3 are reserved with configuration pads or resistors).

Figure 7-2 Schematic diagram of original CH224 I/O level configuration

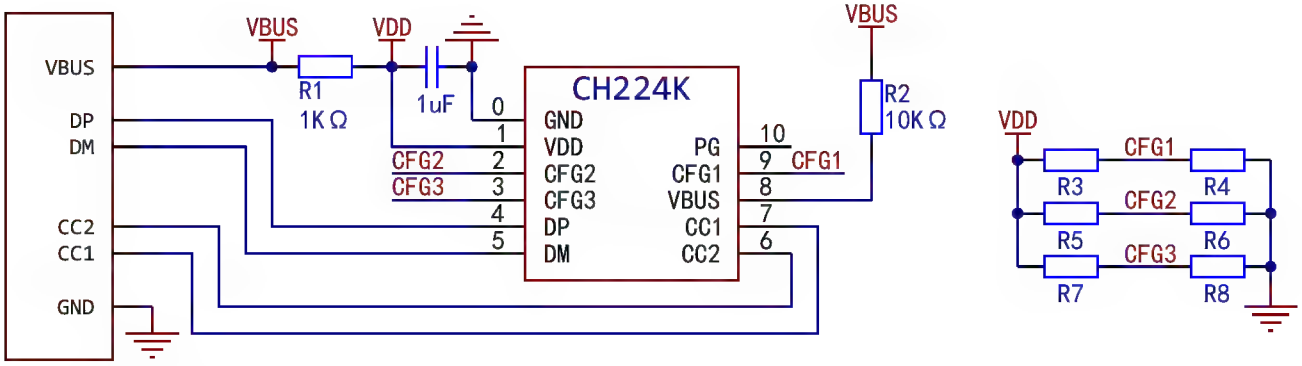

The following changes are required:

1. Short or replace R1 with 0Ω;
2. Short or replace R2 with 0Ω;
3. Replace the original R3 with 100KΩ, and leave R5 and R7 unsoldered (CFG2 and CFG3 of CH224A have their own internal pull-ups);
4. Short R4, R6 and R8 according to the I/O level configuration mode selection of CH224A.

7.3 Other Precautions

- The single resistor configuration and I/O level configuration of CH224A and CH224K use different resistor values or I/O level corresponding voltages.

8. Parameters

8.1 Absolute Maximum Value

8.1.1 CH224Q/A Absolute Maximum Value (Critical or exceeding the absolute maximum value will probably cause the chip to work improperly or even be damaged)

Symbol	Parameter	Min.	Max.	Unit
TA	Ambient temperature during operation	-40	105	℃
TS	Ambient temperature during storage	-55	125	℃
VHV	Operating power supply voltage	-0.5	32.0	V
VIOHV	Voltage on high-voltage capable pins (PG, VBUS)	-0.5	32.0	V
VIOCC	Voltage on pin CC1, CC2	-0.5	32.0	V
VIOUX	Voltage on pin DP, DMM, CFG1	-0.5	3.8	V
VIOFT	Voltage on pin CFG2, CFG3	-0.5	6.5	V
PD	Maximum power consumption of the entire chip (VHV voltage * current)		300	mW

8.1.2 CH221K Absolute Maximum Value (Critical or exceeding the absolute maximum value will probably cause the chip to work improperly or even be damaged)

Symbol	Parameter	Min.	Max.	Unit
TA	Ambient temperature during operation	-40	105	℃
TS	Ambient temperature during storage	-55	125	℃
VDD	Operating power supply voltage (VDD to power supply, GND to ground)	-0.5	5.8	V
VODHV	The voltage on the high-voltage open-drain output pin PG	-0.5	13.5	V
VIOCC	Voltage on pin CC1, CC2	-0.5	8	V
VIOUX	Voltage on pin CFG	-0.5	VDD+0.5	V
PD	Maximum power consumption of the entire chip (VDD voltage * current)		250	mW

8.1.3 CH224K Absolute Maximum Value (Critical or exceeding the absolute maximum value will probably cause the chip to work improperly or even be damaged)

Symbol	Parameter	Min.	Max.	Unit
TA	Ambient temperature during operation	-40	90	℃
TS	Ambient temperature during storage	-55	125	℃
VDD	Operating power supply voltage (VDD to power supply, GND to ground)	3.0	3.6	V
VODHV	Voltage on pin VBUS	-0.5	13.5	V
VIOCC	Voltage on pin CC1, CC2, CFG1	-0.5	8	V
VIOUX	Voltage on pin DP, DM, CFG2, CFG3	-0.5	VDD+0.5	V
PD	Maximum power consumption of the entire chip (VDD voltage * current)		400	mW

8.1.4 CH224D Absolute Maximum Value (Critical or exceeding the absolute maximum value will probably

cause the chip to work improperly or even be damaged)

Symbol	Parameter	Min.	Max.	Unit
TA	Ambient temperature during operation	-40	100	℃
TS	Ambient temperature during storage	-55	125	℃
VDD	Operating power supply voltage (VDD to power supply, GND to ground)	-0.5	6	V
VODHV	Voltage on pin VBUS	-0.5	24	V
VIOCC	Voltage on pin CC1, CC2	-0.5	20	V
VIOUX	Voltage on pin DP, DM, CFG1, CFG2, CFG3, DRV, NMOS#, ISP, ISN	-0.5	VDD+0.5	V
VIOHX	Voltage on pin GATE	-0.5	VIOHV+6.5	V
PD	Maximum power consumption of the entire chip (VDD voltage * current)		300	mW

8.2 Electrical Parameters

8.2.1 CH224Q/A Electrical Parameters (Test condition: TA = 25℃)

Symbol	Parameter	Condition	Min.	Typ.	Max.
VHV	High voltage supply voltage VHV	3.3	5.0	30	V
ICC	Power supply current during operation		1.8	12	mA
VILI2C	I2C active low voltage	0		0.8	V
VIHI2C	I2C active high voltage	1.5		3.3	V
RPUFB	Pull-up resistor on pin CFG2, CFG3	7	10	15	KΩ
VVHVX	VHV power supply overvoltage reset OVR protection voltage	32	33	34	V
VR	Power-on reset voltage threshold	2.2	2.4	2.65	V

8.2.2 CH221K Electrical Parameters (Test condition: TA = 25℃)

Symbol	Parameter	Condition	Min.	Typ.	Max.
VLDOK	Internal power regulator VDD shunt regulator	3.0	3.3	3.6	V
ILDO	Internal power regulator VDD parallel sink current capability	0		30	mA
VR	Power-on reset voltage threshold	2.2	2.4	2.6	V

8.2.3 CH224K Electrical Parameters (Test condition: TA = 25℃)

Symbol	Parameter	Condition	Min.	Typ.	Max.
VLDOK	Internal power regulator VDD shunt regulator	3.24	3.3	3.36	V
ILDO	Internal power regulator VDD parallel sink current capability	0		30	mA
TOTA	Reference threshold temperature of over-temperature protection module OTA	90	105	120	℃
VR	Power-on reset voltage threshold	2.2	2.4	2.6	V

8.2.4 CH224D Electrical Parameters (Test condition: TA = 25℃)

Symbol	Parameter	Condition	Min.	Typ.	Max.
VLDOK	Internal power regulator VDD output voltage	4.6	4.7	4.8	V
ILDO	Internal power regulator VDD external load ability			10	mA
VR	Power-on reset voltage threshold	2.2	2.4	2.6	V

9. Package Information

Note: The dimensioning unit is mm.
The pin center distance is a nominal value, no error, and other errors are not more than ±0.2mm.

9.1 ESSOP10

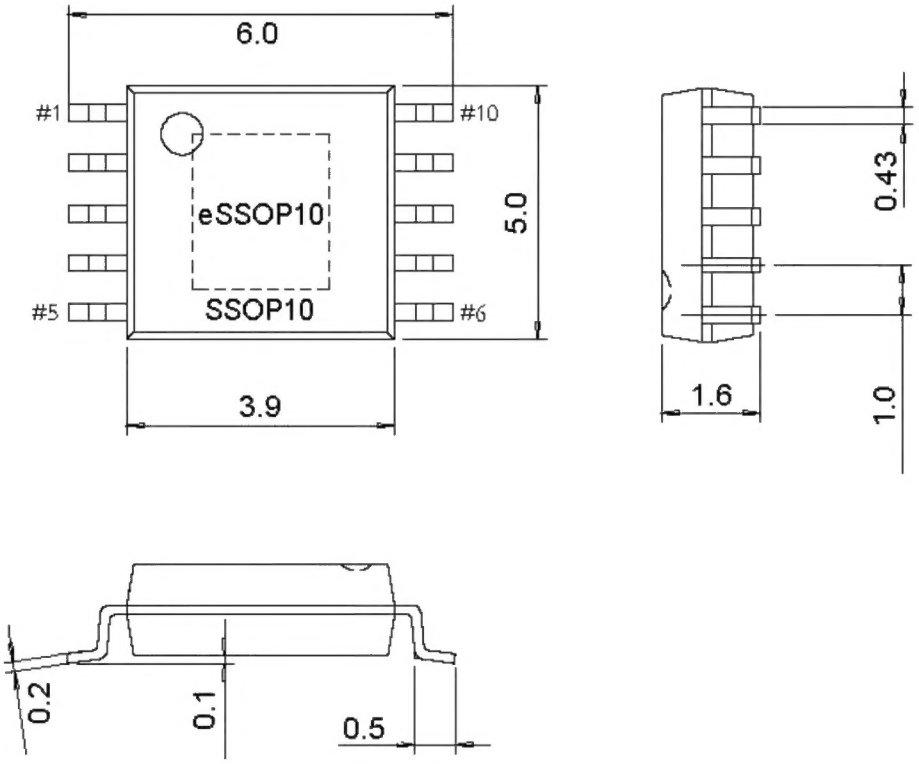

9.2 DFN10

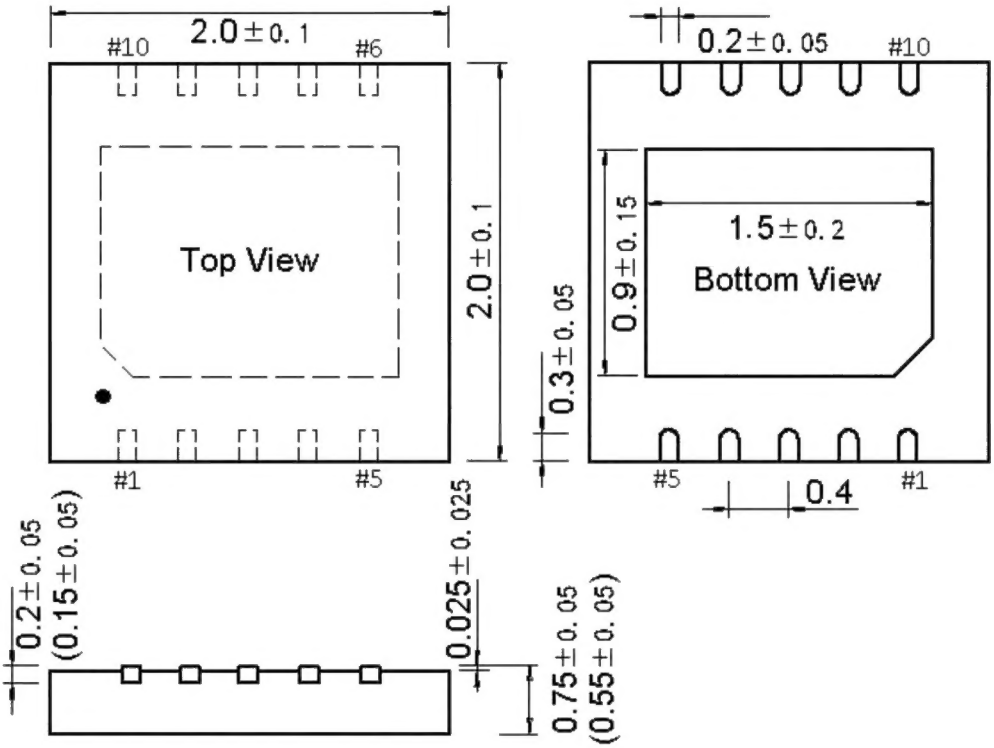

9.3 DFN20

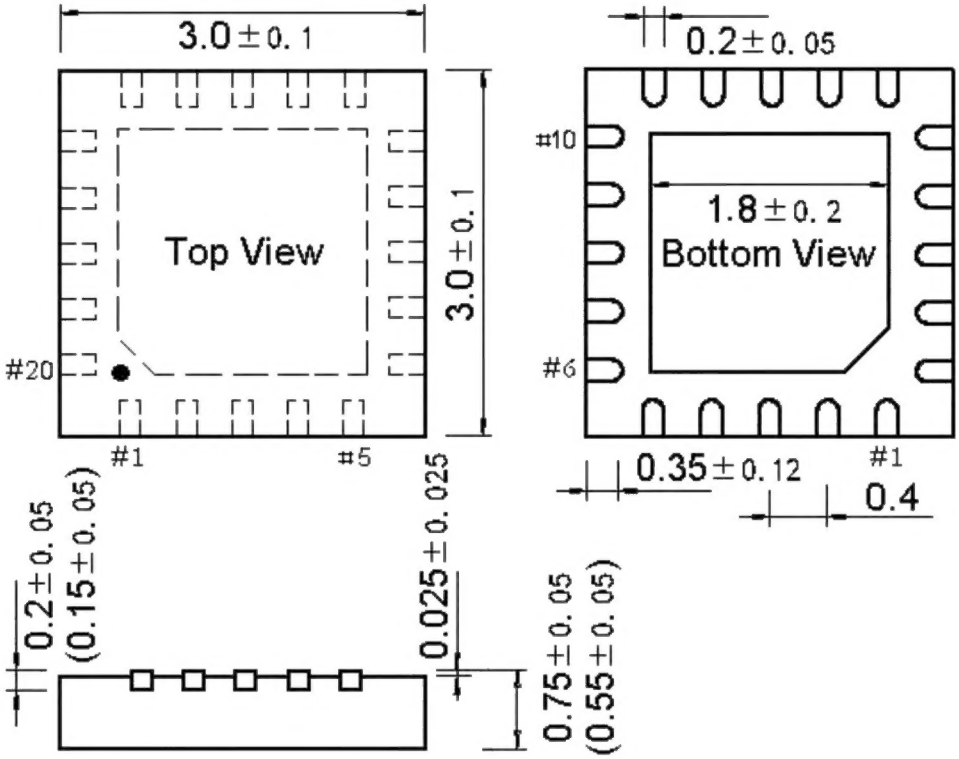
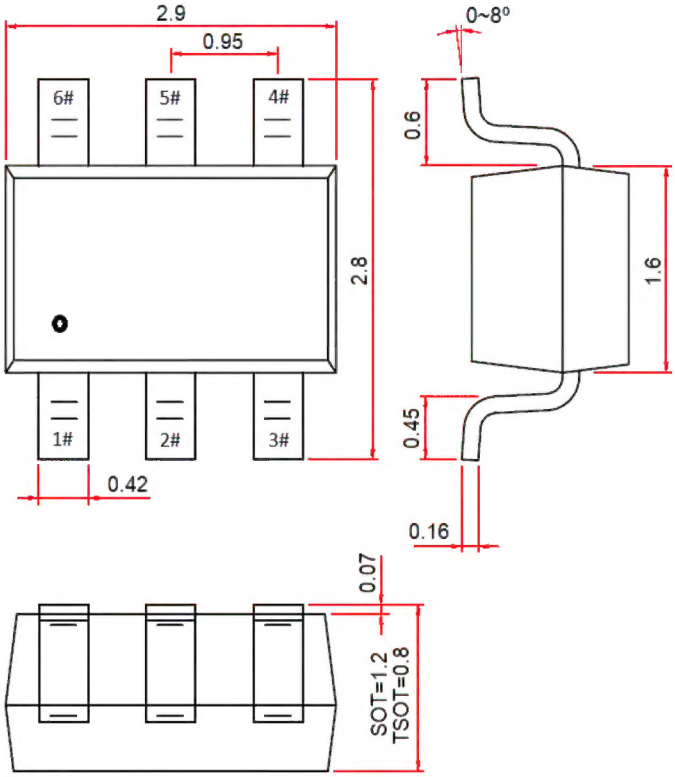
9.4 SOT23-6